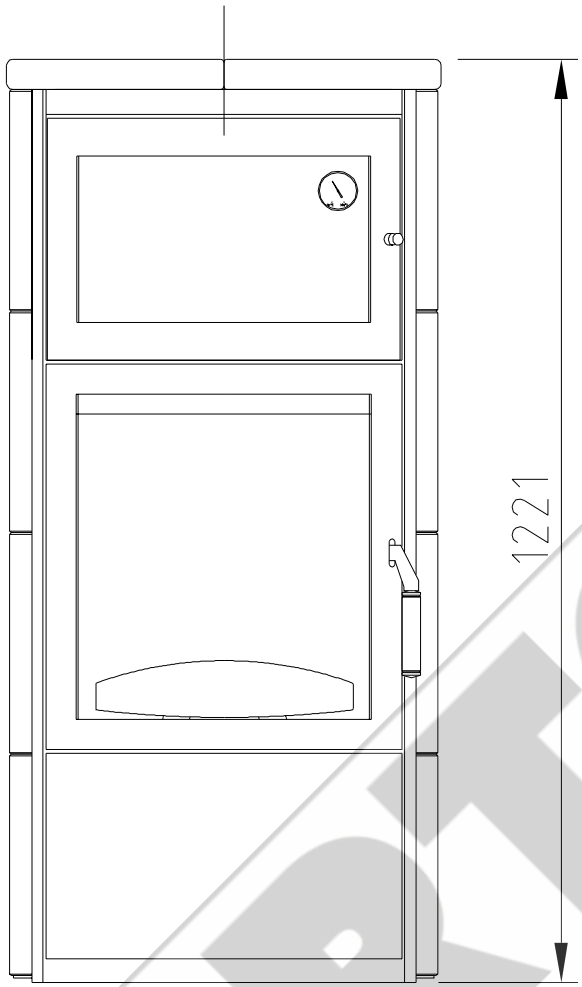

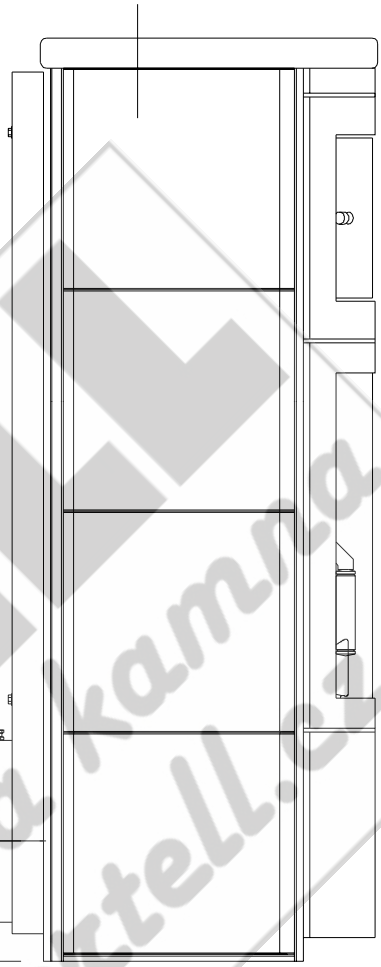

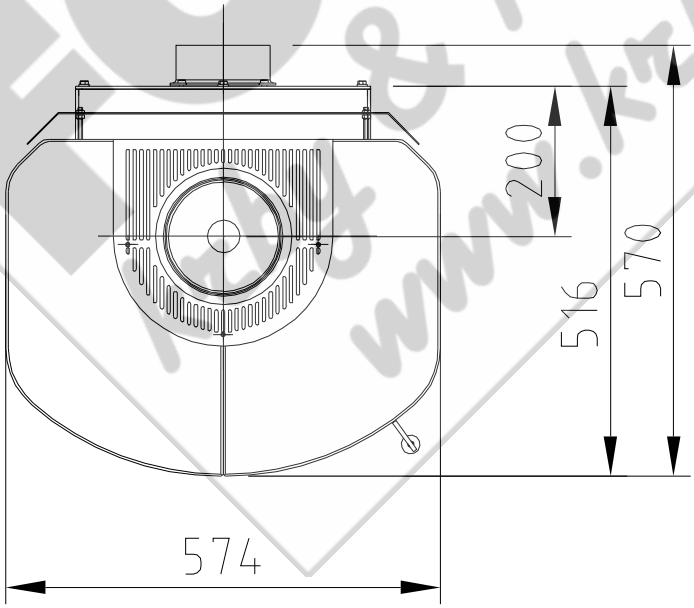

FORTELL
krby & kachlová kamna
www.krby-fortell.cz